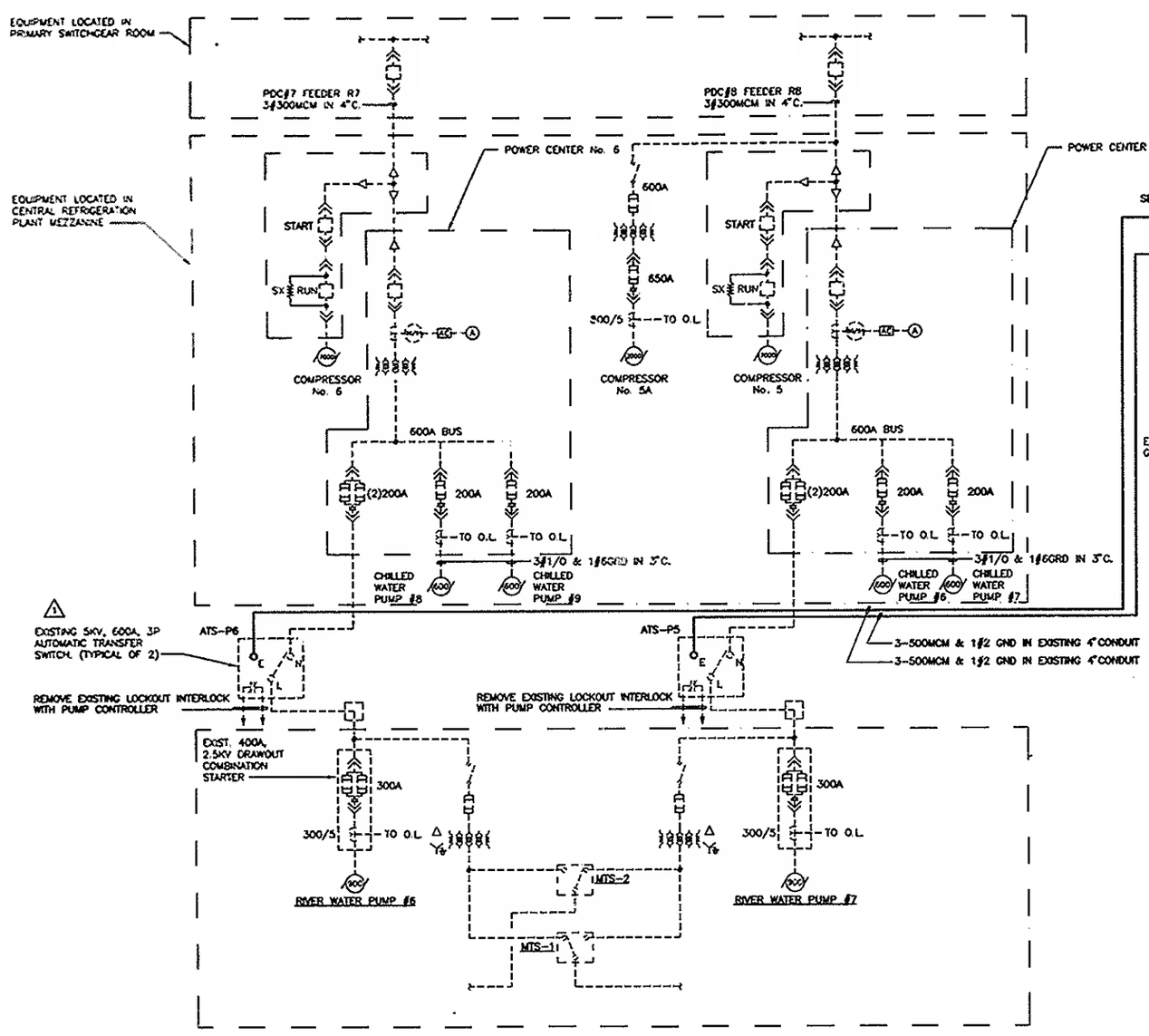

ONE LINE DIAGRAM
WATER RIVER PUMP MODIFICATIONS
NOT TO SCALE

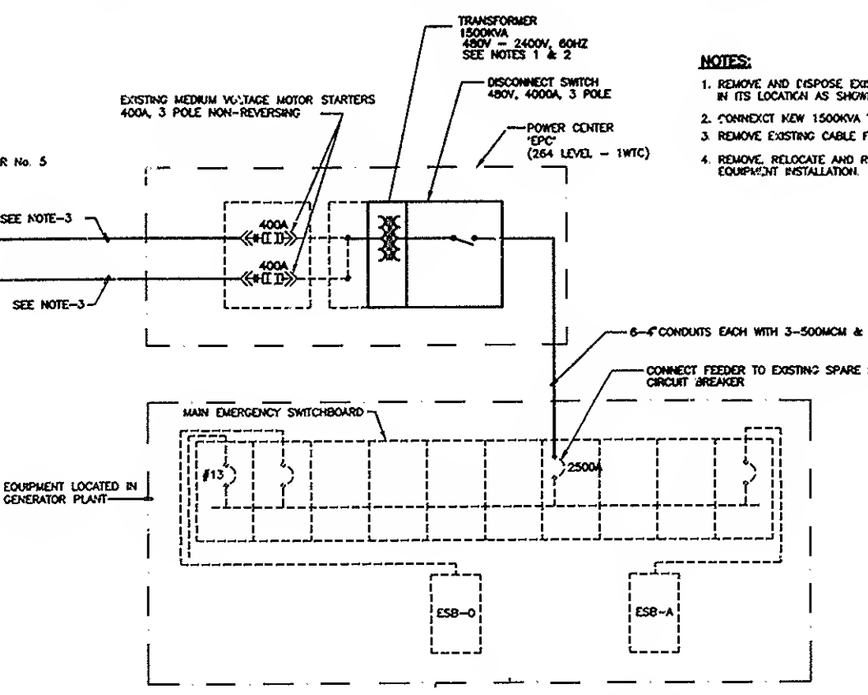

NOTES:

1. REMOVE AND DISPOSE EXI
IN ITS LOCATION AS SHOW
2. CONNEXCT KEW 1500KVA
3. REMOVE EXISTING CABLE F
4. REMOVE, RELOCATE AND R
EQUIPMENT INSTALLATION.

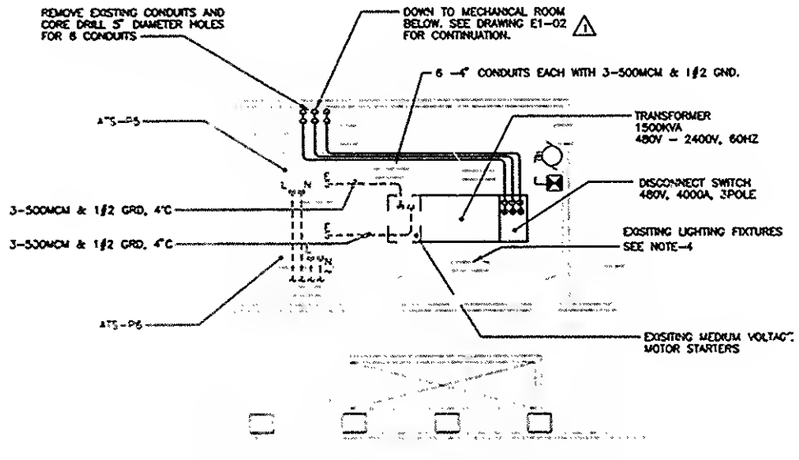

PLAN – POWER CENTER 'EPC' ROOM
ELEV. 264 LEVEL 1 WTC

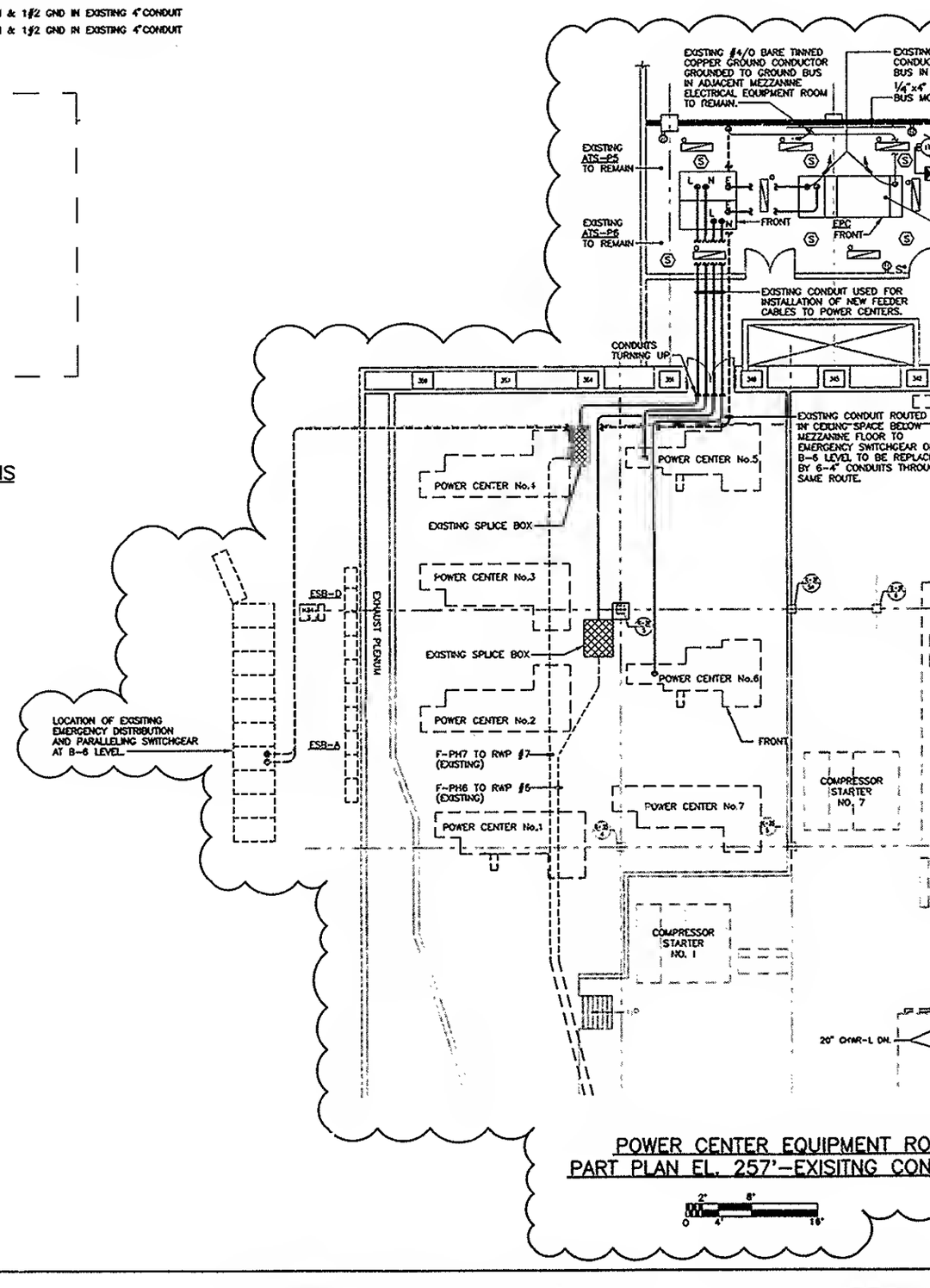

POWER CENTER EQUIPMENT RO
PART PLAN EL. 257'-EXISITNG CON